1 Features and Benefits

- Operating voltage range: 3.5 ~ 10.5V
- Rail to Rail voltage output
- Rated output current: 6 mA
- Stable switching signal without mechanical contact and spark
- High reliability and safety without shaking moment
- TO-92UA and SOT23-3L package options
- Developed according to the EU RoHS and REACH

2 Application Examples

- Automotive electronics, Consumer electronics and Industrial electronics
- Brake light wake-up switch
- Electronic steering column lock
- Door latch system
- BLDC Encoder
- Sunroof/Tailgate opener
- Transmission applications
- Electrical power steering

3 Selection Guide

Part Number	Packing	Mounting	Operating, T	S(Min)	S(Max)
AH3519/E-UA	Bulk, 1000 pieces/bag	3-pin SIP through hole	–40ºC to 85ºC	45mV/mT	55mV/mT
AH3519/E-M	7-in. reel, 3000 pieces/reel	3-pin SOT23-3L surface mount	–40ºC to 85ºC	45mV/mT	55mV/mT
AH3519/K-UA	Bulk, 1000 pieces/bag	3-pin SIP through hole	–40ºC to 125ºC	45mV/mT	55mV/mT
AH3519/K-M	7-in. reel, 3000 pieces/reel	3-pin SOT23-3L surface mount	–40ºC to 125ºC	45mV/mT	55mV/mT

NOTE 1. Hall ICs are soldered tin brazing for assembly, and wave soldering of SOT-23-3L surface-mounted components poses a risk of failure.
2. A risk of circuit failure may happen in non-brazing processes such as electric resistance welding, high-frequency welding, etc.
3. E: -40~85°C; K: -40~125°C; L: -40~150°C.

SOT-23-3L
(Type M)

TO-92UA
(Type UA)

Nanjing AH Electronic Science & Technology Co., Ltd. TEL: 025-84670370 WEB: www.ahest.net
ADD: Building 3, Huaye Park, Qidi City, 8, Zhineng Road, KyLin Technology Innovation Park, Nanjing, China

4 General Description

The AH3519 is an analog signal output Hall IC, the output voltage changes with the changes of magnetic field. It has built-in circuit units such as reverse voltage protector, voltage regulator, temperature compensation circuit, Hall voltage generator, signal amplifier, etc. The high performance voltage regulator and temperature compensation circuit ensure that the sensor operates steadily over a wide range of voltages, and the reverse voltage protection circuit prevents the sensor from being damaged by the reverse voltage.
The AH3519 is produced with BCD technology. It is available in two package types: SOT-23-3L (Type M) and TO-92UA (Type UA). Each package is lead (Pb) free, with 100% matte tin plated leadframes.

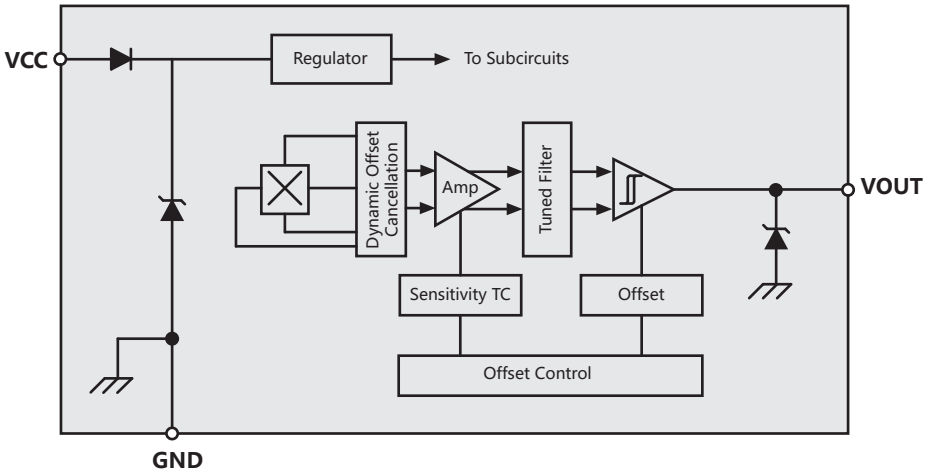

5 Terminal List

SOT-23-3L
(Type M)

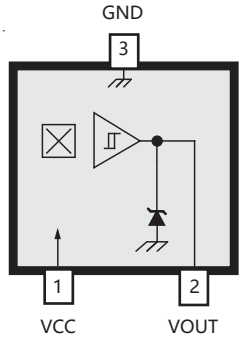

TO-92UA
(Type UA)

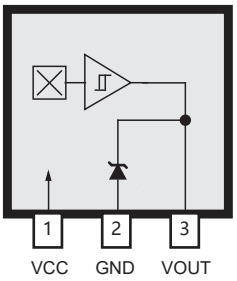

Name	Description	Number	
		Package M	Package UA
VCC	Connects power supply to chip	1	1
GND	Ground	2	2
VOUT	Output	3	3

Nanjing AH Electronic Science & Technology Co., Ltd. TEL: 025-84670370 WEB: www.ahest.net
ADD: Building 3, Huaye Park, Qidi City, 8, Zhineng Road, KyLin Technology Innovation Park, Nanjing, China

6 Absolute Maximum Ratings

Characteristic	Symbol	Note	Rating	Unit
Supply Voltage	V_{CC}		11	V
Reverse Supply Voltage	V_{RCC}		-0.5	V
Maximum Output Voltage	V_{OUTmax}	test at 11V Supply Voltage	10.95	V
Minimum Output Voltage	V_{OUTmin}	test at 11V Supply Voltage	0.02	V
Output Current	$I_{OUTSINK}$		1	mA
Magnetic Flux Density	B		Unlimited	G
Operating Temperature	T_A	E	-40 to 85	ºC
Operating Temperature	T_A	K	-40 to 125	ºC
Maximum Junction Temperature	$T_{J(max)}$	Too high a Tj could lead to electrical or thermal breakdown	165	ºC
Storage Temperature	T_{stg}		-50 to 160	ºC
ESD sensitivity – HBM	-		6	kV

NOTE 1. Human Body Model according to AEC-Q100-002 standard.

7 Electrical Operating Characteristics

valid through the full operating temperature range; unless otherwise specified

Characteristic	Symbol	Test Conditions	Min.	Typ.	Max.	Unit
Supply Voltage	V_{CC}	Operating, T_J<165ºC	3.5	-	10.5	V
Null Voltage	V_{OH}	V_{CC}=5V, no load on VOUT	2.4	-	2.6	V
Output Voltage	V_{OL}	V_{CC}=5V, I_{OUTMAX}=1.0mA	0.1	-	4.9	V
Supply Current	I_{CC}	V_{CC}=5V	-	5.5	8	mA

8 Magnetic Operating Characteristics

valid through the full operating temperature range; unless otherwise specified

Characteristic	Symbol	Test Conditions	Min.	Typ.	Max.	Unit
Sensititvity	S	V_{CC}=5V, T_A=25ºC	45	51.25	55	mV/mT
Sensitivity Drift	T_C	Compare with the sensitivity under 25ºC within operating Temp.	0.06	0.12	0.18	ºC/%
Sensitivity Tolerance	ΔS	—	-10	-	+10	%
Delta V_{NULL} as Temperature	V_{NULL}(T)	—	-1.5	-	+1.5	ºC/%
Ratiometry V_{NULL}	V_{NULL}(V)	—	-5	-	+5	%
Linearity	L	—	-2.5	-	+2.5	%
Linear Area	L_{IN}	—	-37	-	+37	mT

Nanjing AH Electronic Science & Technology Co., Ltd. TEL: 025-84670370 WEB: www.ahest.net
ADD: Building 3, Huaye Park, Qidi City, 8, Zhineng Road, KyLin Technology Innovation Park, Nanjing, China

9 Magnetic Behavior

Vo raises with increasing B (S pole)

The sensor will pass linear area /nonlinear area/ saturation area during the magnetic induction increases. When there is no magnetic field that applies in sensor (B=0), the output voltage of sensor is only half of Vcc (Vcc/2); when N pole faces mark surface of the sensor and is close to it gradually (B→-∞), the output voltage begins to decrease, and the voltage doesn't reduce with the increased magnetic field after it reaches saturation voltage; When the S pole of magnet faces the mark surface of the sensor and is closed to it gradually (B→+∞), the output voltage of sensor begins to increase, and it doesn't increase with the increased magnetic field after it reaches saturation voltage. The magnetoelectric conversion characteristics of AH3519 are shown in the figure:

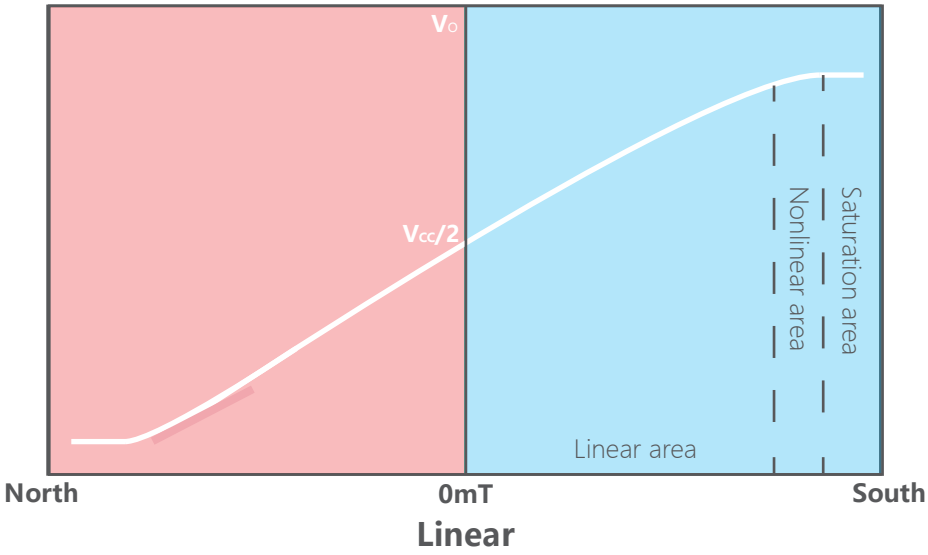

Nanjing AH Electronic Science & Technology Co., Ltd. TEL: 025-84670370 WEB: www.ahest.net
ADD: Building 3, Huaye Park, Qidi City, 8, Zhineng Road, KyLin Technology Innovation Park, Nanjing, China

Vo raises with increasing B (N pole)

The sensor will pass linear area /nonlinear area/ saturation area during the magnetic induction increases. When there is no magnetic field that applies in sensor (B=0), the output voltage of sensor is only half of Vcc (Vcc/2); when S pole faces mark surface of the sensor and is close to it gradually (B→-∞), the output voltage begins to decrease, and the voltage doesn't reduce with the increased magnetic field after it reaches saturation voltage; When the N pole of magnet faces the mark surface of the sensor and is closed to it gradually (B→+∞), the output voltage of sensor begins to increase, and it doesn't increase with the increased magnetic field after it reaches saturation voltage. The magnetoelectric conversion characteristics of AH3519 are shown in the figure:

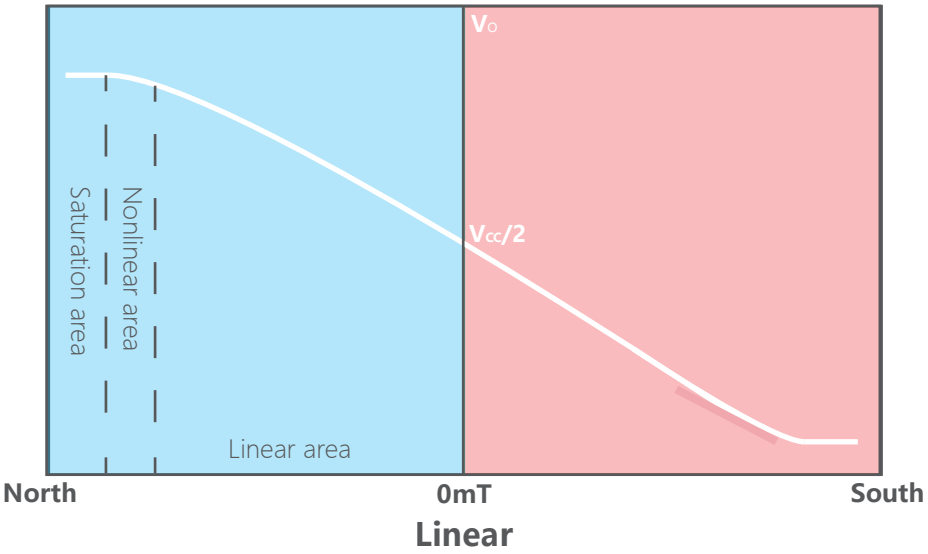

SOT-23-3L
(Type M)

Nanjing AH Electronic Science & Technology Co., Ltd. TEL: 025-84670370 WEB: www.ahest.net
ADD: Building 3, Huaye Park, Qidi City, 8, Zhineng Road, KyLin Technology Innovation Park, Nanjing, China

10 Package Information

SOT-23-3L

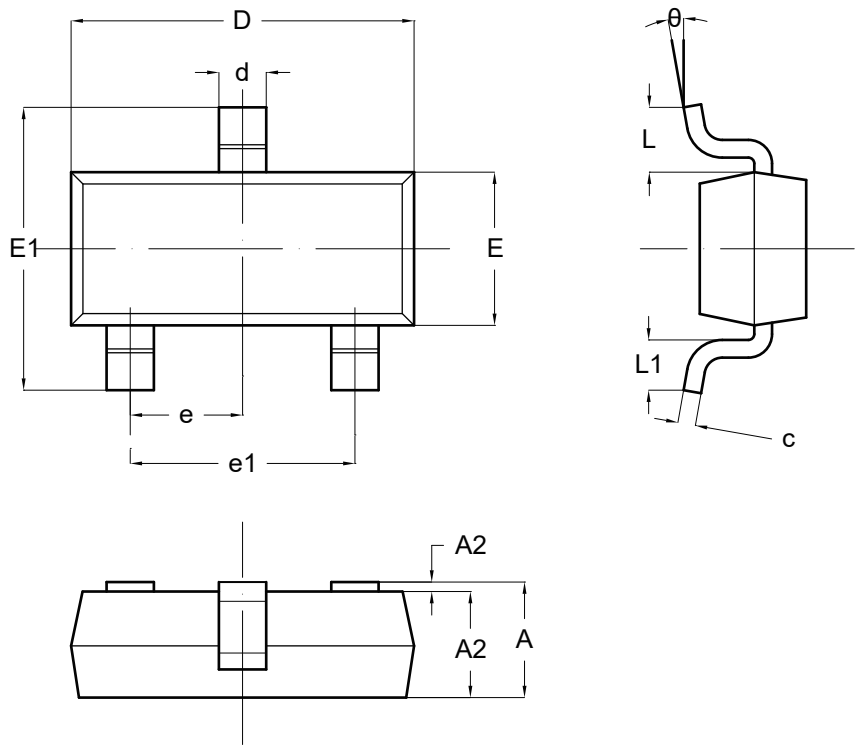

Symbol	Dimension (Unit: mm)	
	Min	Max
A	1.050	1.250
A1	0.000	0.100
A2	1.050	1.150
b	0.300	0.500
c	0.100	0.200
D	2.820	3.020
E	1.500	1.700
E1	2.650	2.950
e	0.950BSC.	
e1	1.800	2.000
L	0.550REF.	
L1	0.300	0.600
θ	0°	8°

Nanjing AH Electronic Science & Technology Co., Ltd. TEL: 025-84670370 WEB: www.ahest.net
ADD: Building 3, Huaye Park, Qidi City, 8, Zhineng Road, KyLin Technology Innovation Park, Nanjing, China

TO-92UA

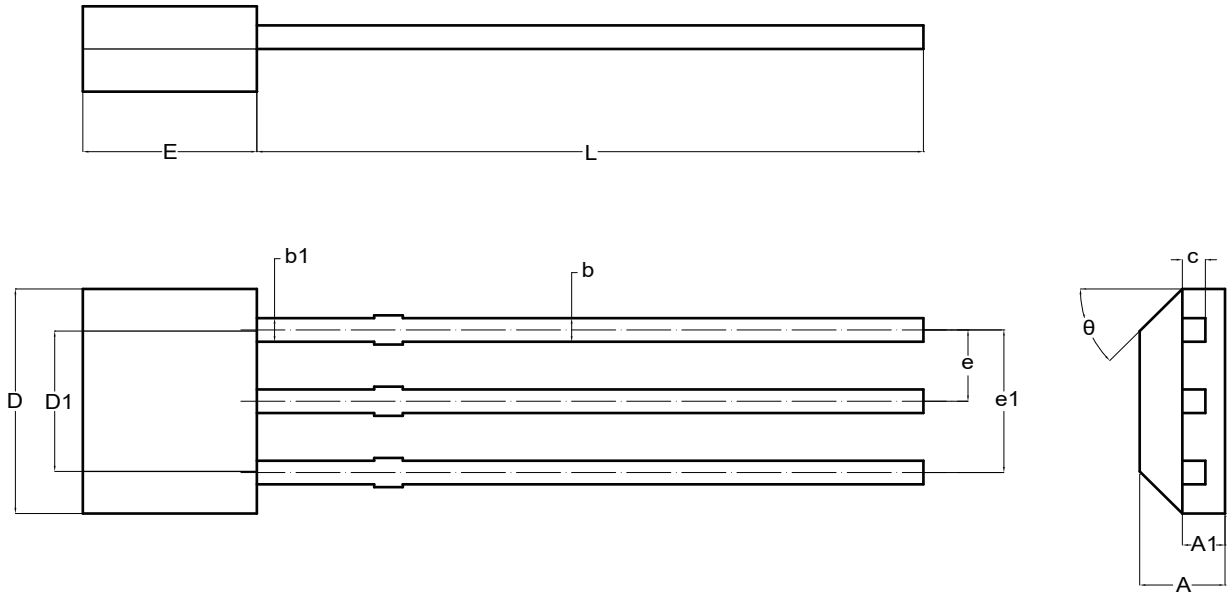

Symbol	Dimension (Unit: mm)	
	Min	Max
A	1.420	1.620
A1	0.660	0.860
b	0.330	0.480
b1	0.400	0.510
c	0.330	0.510
D	3.900	4.100
D1	2.280	2.680
E	3.050	3.250
e	1.270TYP.	
e1	2.440	2.640
L	14.350	14.750
θ	45°TYP.	

Nanjing AH Electronic Science & Technology Co., Ltd. TEL: 025-84670370 WEB: www.ahest.net
ADD: Building 3, Huaye Park, Qidi City, 8, Zhineng Road, KyLin Technology Innovation Park, Nanjing, China

12 Marking Information

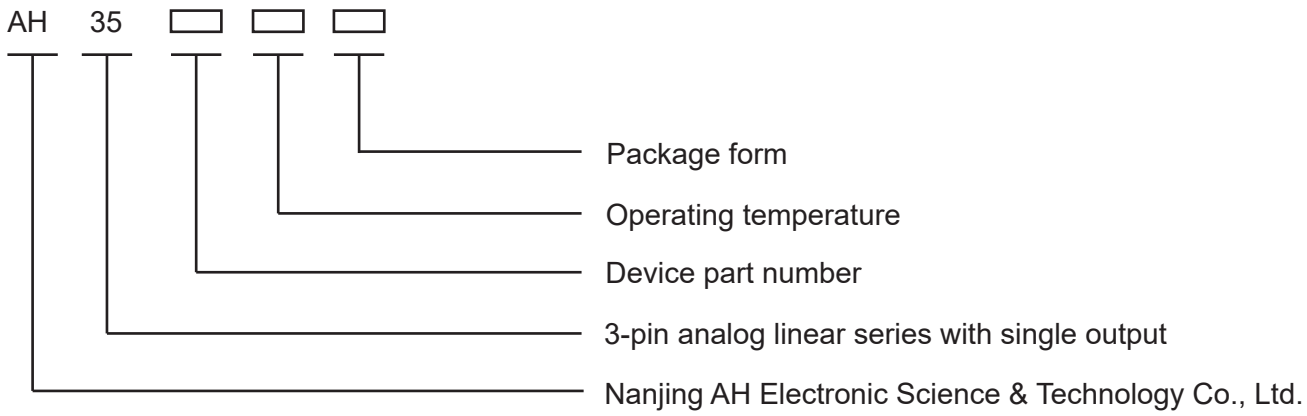

- Package Form:

  M —— SOT-23-3L（SMD）

  S —— SOT-89（SMD）

  UA —— TO-92UA/TO-92S（SIP）

Note: M and S type are packed in reels, M 3k/reel, S 1k/reel;

UA type is packed in bags of 1k/bag or 0.5k/bag.

- Operating Temperature:

  E —— -40℃ ~ +85℃

  L —— -40℃ ~ +150℃

Copyright 2003~2020 Nanjing AH Electronic Science & Technology Co., Ltd.
Nanjing AH Electronic Science & Technology Co., reserves the right to improve the performance, reliability or manufacturability of its products at any time according to detailed specifications. Before placing an order, the user is cautioned to verify that the information being relied upon is up-to-date. AHNJ' s products are not to be used in any life support devices or systems (including but not limited to the listed devices or systems), in which a failure can reasonably be expected to cause bodily harm. The information included herein is believed to be accurate and reliable. However, Nanjing AH Electronic Science & Technology Co., assumes no responsibility for its use; nor for any infringement of patents or other rights of third parties which may result from its use.
Learn more about our products for your application, please contact us:

nianrong@ahest.com

Nanjing AH Electronic Science & Technology Co., Ltd. TEL: 025-84670370 WEB: www.ahest.net
ADD: Building 3, Huaye Park, Qidi City, 8, Zhineng Road, KyLin Technology Innovation Park, Nanjing, China